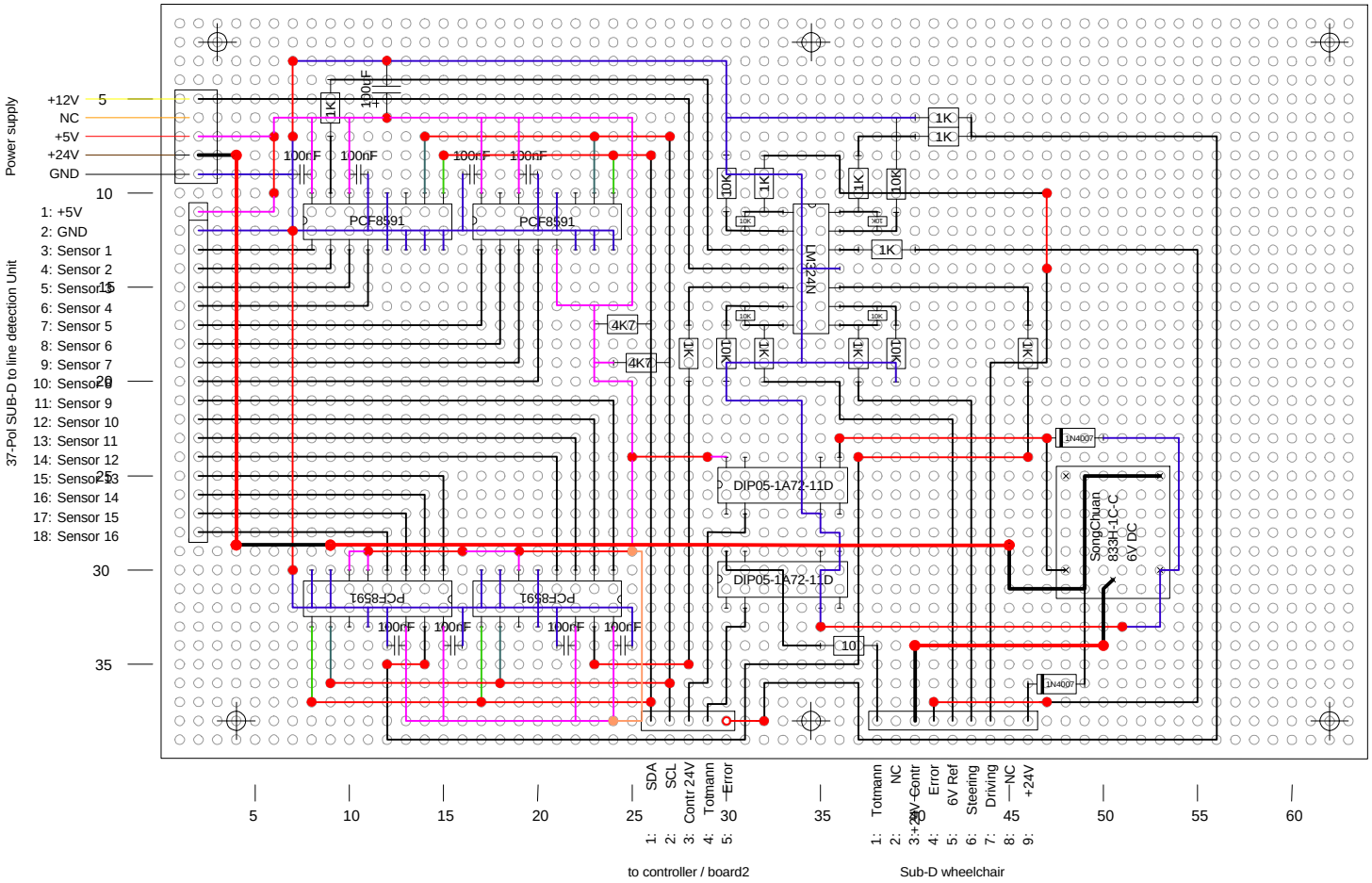

Meyra Sprint I²C control board #1 from 28.5.2006

The drawing is seen from top
Width of grid is 2.54 mm
Wires on top of board are drawn in red/orange
GND is drawn blue
+5V is drawn magenta
Use thick wire for thicker lines

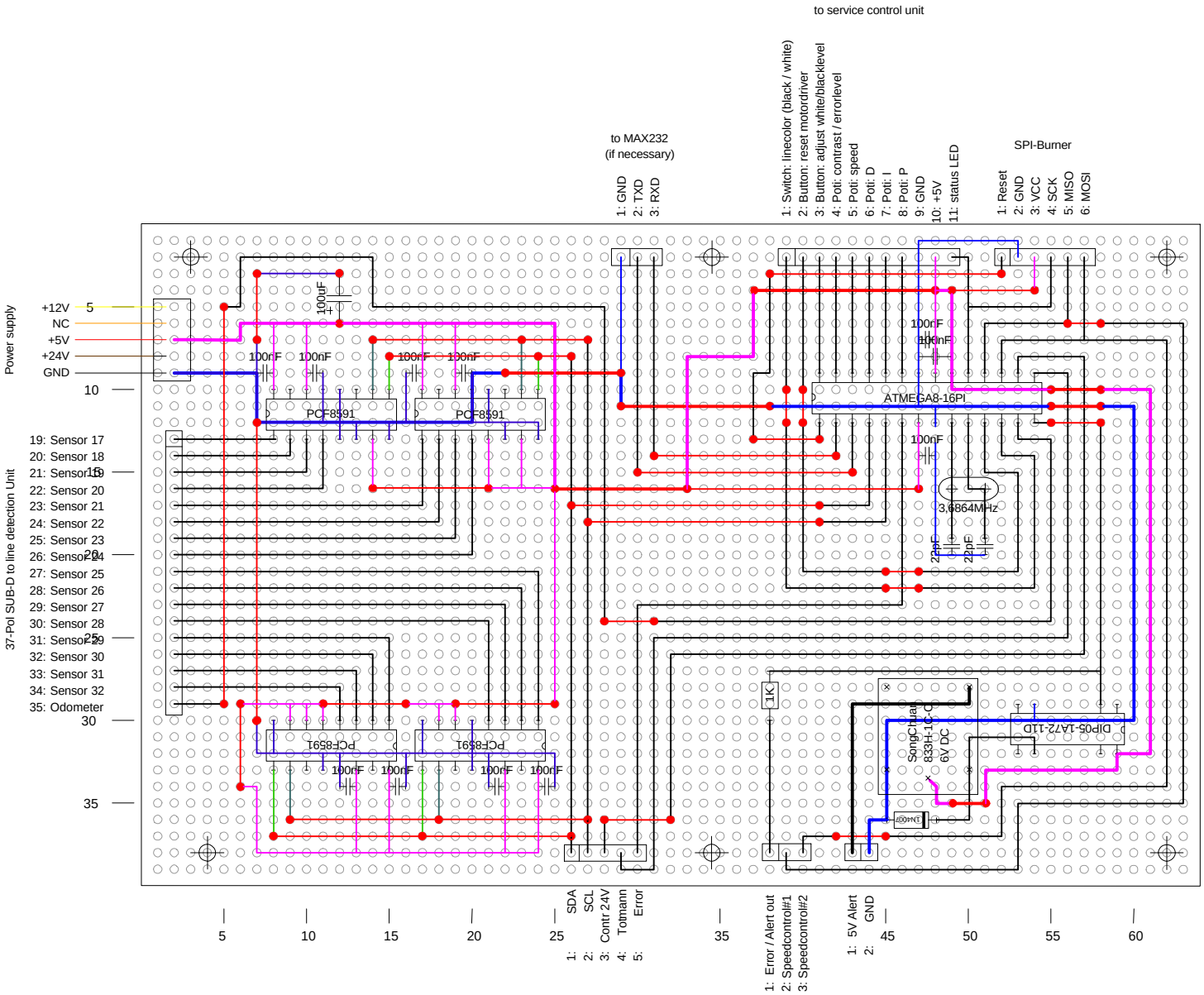

Meyra Sprint I²C control board #2 from 28.5.2006

The drawing is seen from top
Width of grid is 2.54 mm
Wires on top of board are drawn in red/orange
GND is drawn blue
+5V is drawn magenta
Use thick wire for thicker lines